1.0mm Female to 1.0mm Female 4 Hole Flange Adapter

A11001P-F Rev 1

Drawing(mm)

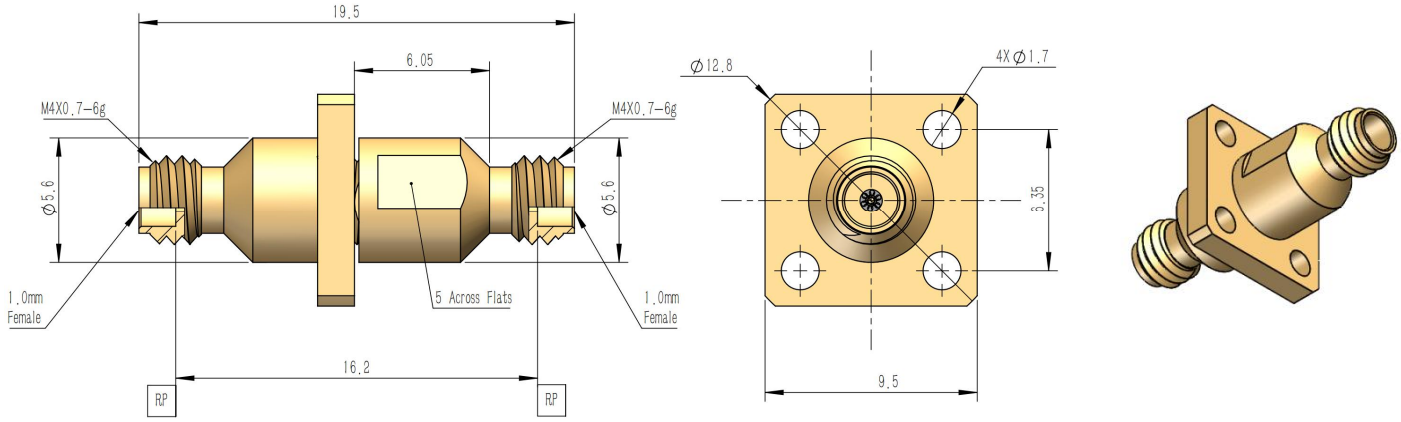

Electrical & Environmental

Impedance	50 ohm
Frequency Range	110 GHz
VSWR	1.35 max
Insertion Loss	0.5dB max
Operating Temp	-55℃ to +85℃
Interface	1.0mm per IEC 61169

Material

Connector Body	Gold plated beryllium copper
Center Contact	Gold plated beryllium copper
Insulator	Cross-linked polystyrene(CPS)
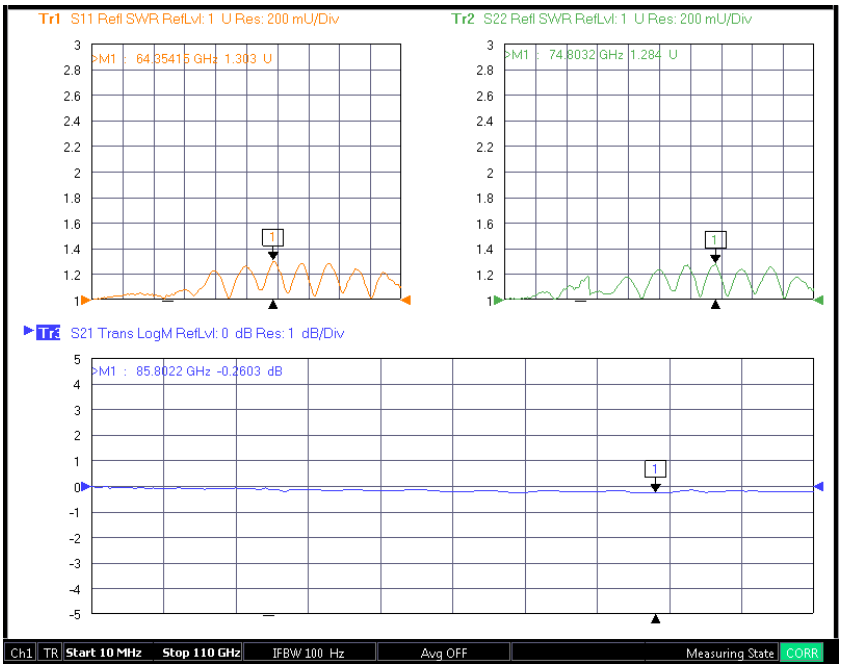
Typical Test Data