AWR11235R



WR112 to 3.5mm Female Waveguide to Coaxial Adapter

CPR 112F Flange, Right Angle

Rev 1

Electrical

Frequency Range	6.57-9.99 GHz
VSWR	1.2 max

Configuration

Waveguide Size	IEC	R84
	EIA	WR112
Flange	IEC	UDR84
	North America	M3922/52-020(UG1735/U) CPR112F
Coax Connector	3.5mm Female	
Body Geometry	Right Angle	

Mechanical & Environmental

Waveguide Body	Aluminum, conductive oxidation, anti-corrosive paint
Connector Body	Passivated stainless steel
Center Contact	Gold plated beryllium copper
Operating Temperature	-40℃ to +85℃
Connector Interface	MIL-STD-348
RoHS	Compliant under exemptions 6 (b) or 6 (c)
Net Weight	Approx 85g

Note

* Flange size may not be 100% identical with the above listed standards, but are compatible. Refer to the next page for comparison table.

* Paint in grey or black by default, other colors available.

AWR11235R



WR112 to 3.5mm Female Waveguide to Coaxial Adapter
CPR 112F Flange, Right Angle

Rev 1

Dimensions(mm)

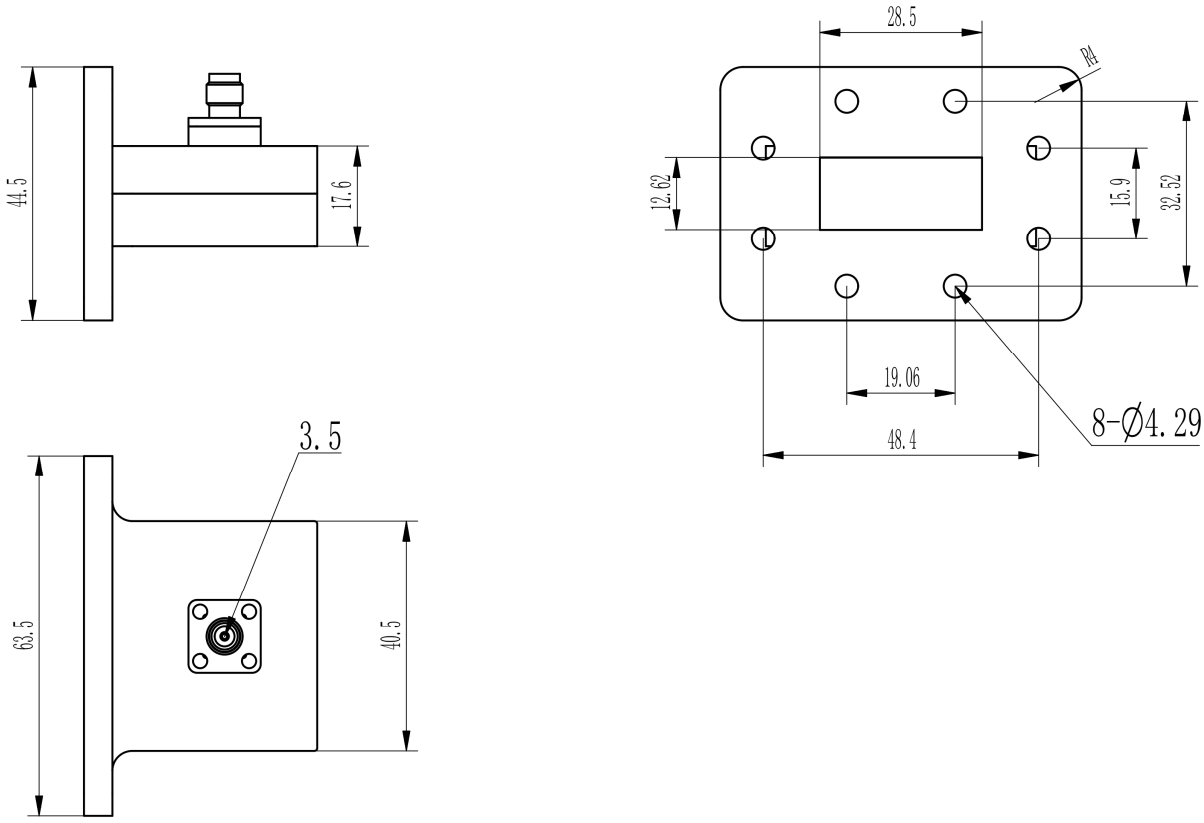

Flange Comparison (mm)

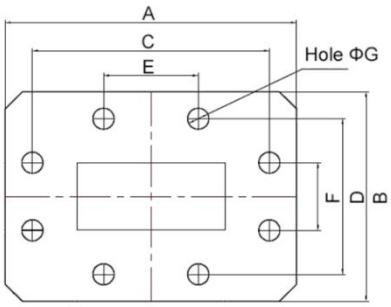

* The purpose of this comparison is to provide a quick reference of different flange standards. Great care has been given, nevertheless there might be a few mistakes.
* Please check the flange compatibility before ordering. Customized flanges are available.

WG SIZE	CONFORMING STANDARD	A	B	C	D	E	F	G
WR112	RF ONE:AWR11235R	63.5	44.5	48.4	32.52	19.06	15.9	4.29
	UDR84	63.5	44.5	48.42	32.54	19.04	15.88	4.00
	CPR 112F	63.5	44.5	48.4	32.52	19.06	15.9	4.29

AWR11235R



WR112 to 3.5mm Female Waveguide to Coaxial Adapter

CPR 112F Flange, Right Angle

Rev 1

Typical Test Data at 25℃

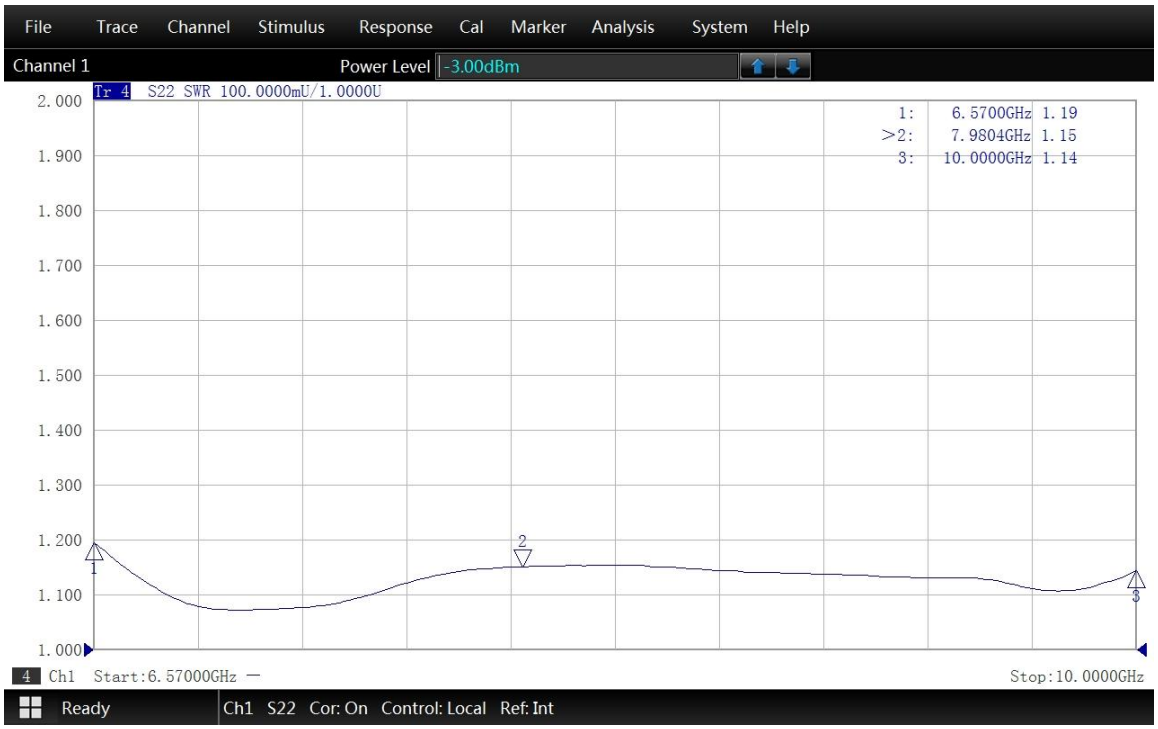

VSWR

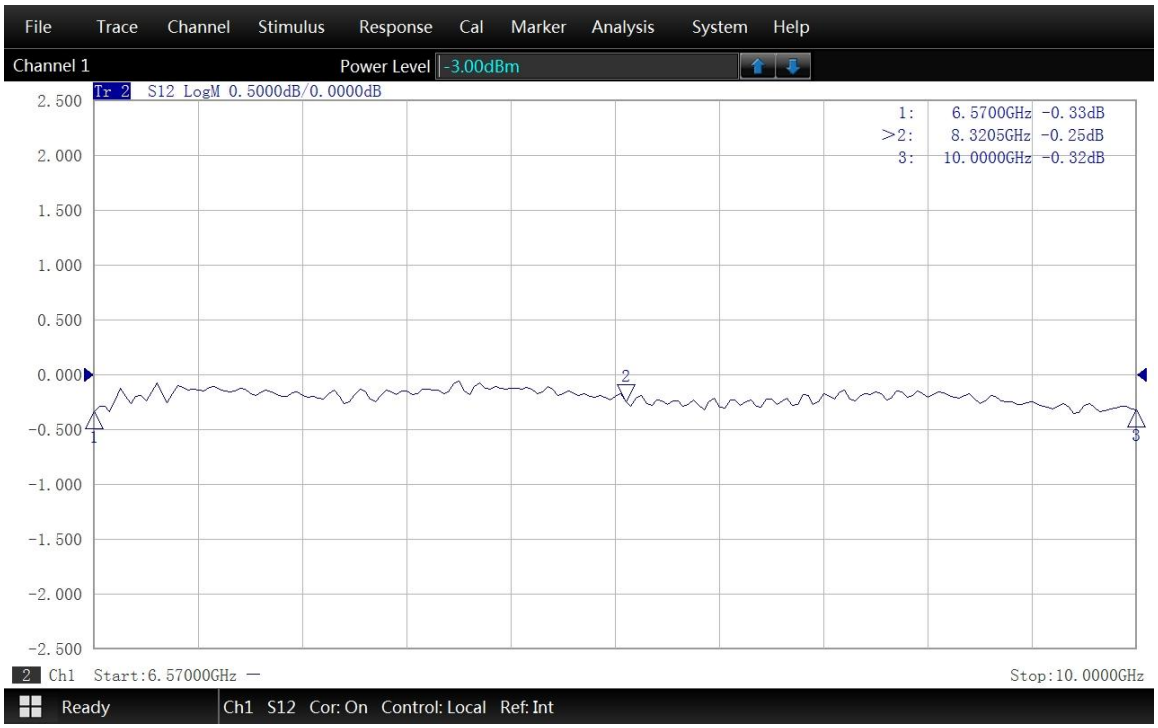

Insertion Loss*

* In Insertion Loss (IL) testing, adapters are measured back-to-back. To obtain the loss of a single adapter, divide the measured value by two.