Inner DC Block

DB6027KSA

10MHz-27GHz, 2.92mm Female to SMA Female, 60 Volts

Rev 1

Electrical & Environmental

Impedance	50 ohm
Frequency Range	10 MHz-27 GHz
VSWR	1.3 max
Insertion Loss	0.4dB max
Voltage Rating	60 Volts max
Input Avg Power	2 Watts max @25℃ (Derate linearly to 0.2 Watt at 100°C)
Operating Temp	-55℃ to 100℃
RoHS	Compliant

Mechanical

Connector	2.92mm Female to SMA Female
Connector Body	Passivated Stainless Steel
Center Contact	1.27um Gold plated beryllium copper
Net Weight	Approx 3g

Dimensions(mm)

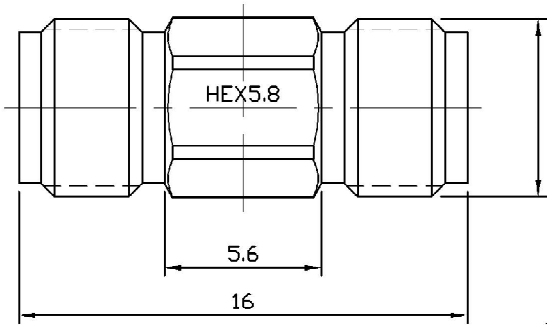

Inner DC Block

DB6027KSA

10MHz-27GHz, 2.92mm Female to SMA Female, 60 Volts

Rev 1
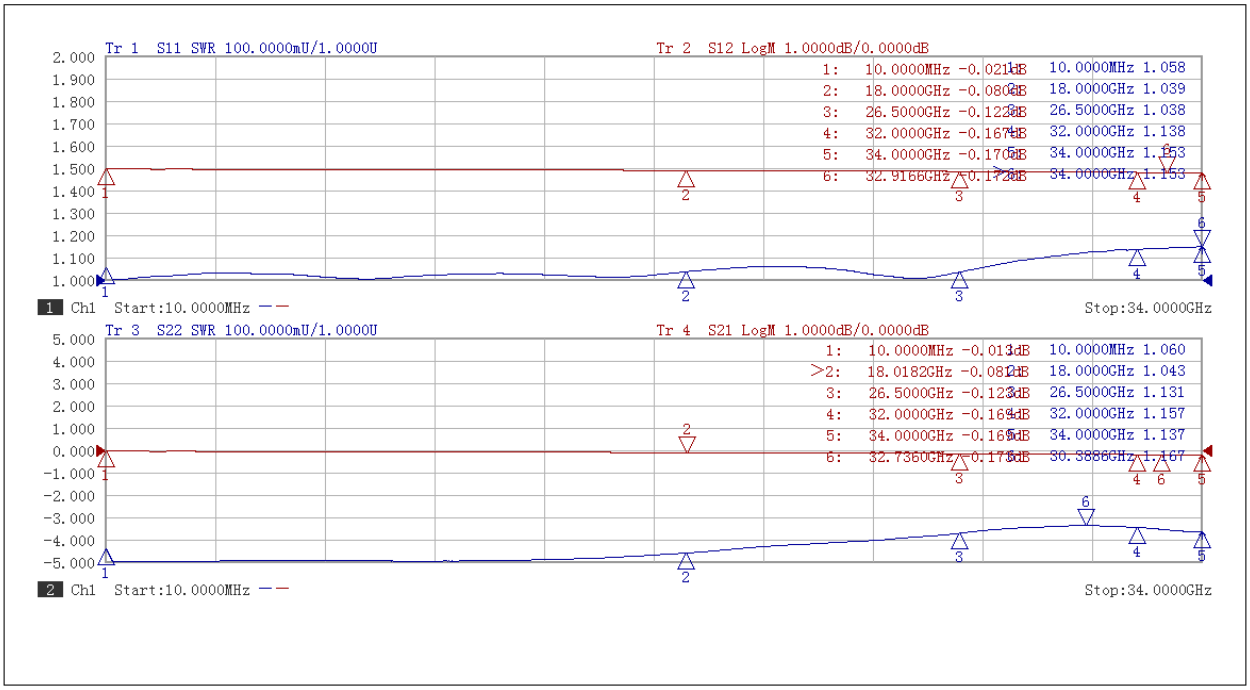
Typical Test Data