Inner DC Block

DB6040QKA

10MHz-40GHz, 2.4mm Female to 2.92mm Female, 60 Volts

Rev 1

Electrical & Environmental

Impedance	50 ohm
Frequency Range	10 MHz-40 GHz
VSWR	1.35 max
Insertion Loss	0.5dB max
Voltage Rating	60 Volts max
Input Avg Power	2 Watts max @25℃ (Derate linearly to 0.2 Watt at 100°C)
Operating Temp	-55℃ to 100℃
RoHS	Compliant

Mechanical

Connector	2.4mm Female to 2.92mm Female
Connector Body	Passivated Stainless Steel
Center Contact	1.27um Gold plated beryllium copper
Net Weight	Approx 3g

Dimensions(mm)

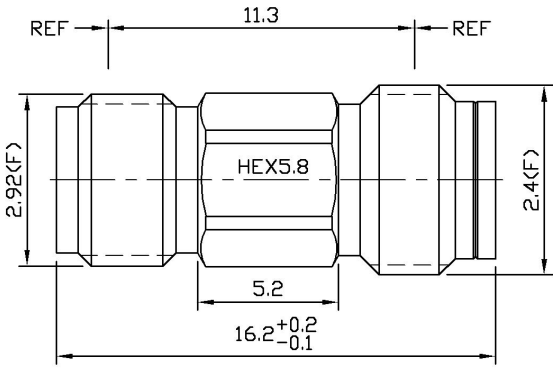
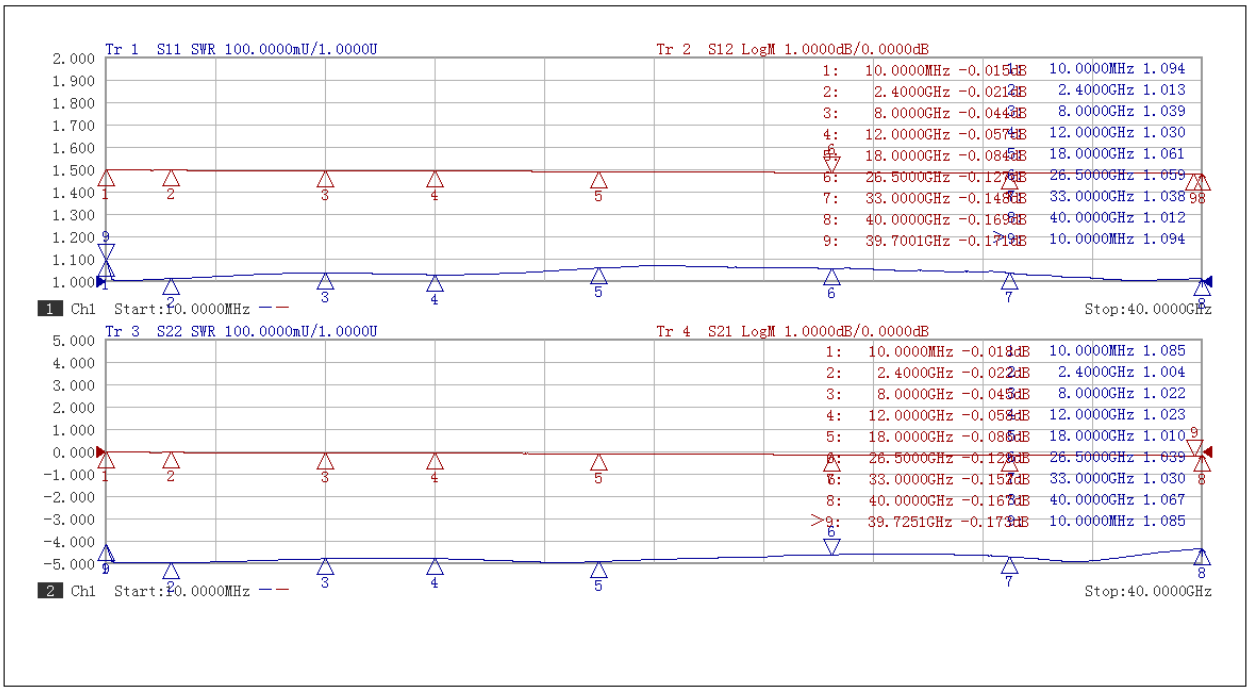
Typical Test Data