DC005265K-10

Directional Coupler, 0.5 to 26.5 GHz, 10 dB, 2.92mm Female

Rev 1

Electrical & Environmental

Frequency Range	0.5-26.5 GHz
Coupling Factor	10±0.7 dB
Coupling Sensitivity	≤±1.0 dB
Insertion Loss	≤2.1 dB (Exclusive of coupling loss 0.46 dB)
VSWR	≤1.5
Directivity	≥12 dB
Impedance	50 Ohms
Input Power (CW)	20 Watts max
Operating temperature	-40℃ ~ +85℃

Mechanical

Connector	2.92mm female*3 Body: stainless steel; Center contact: Gold plated BeCu
Housing	Black painting, aluminum alloy housing
Net weight	80g

Dimensions(Unit: mm/[inch], Tolerance: ±0.5mm)

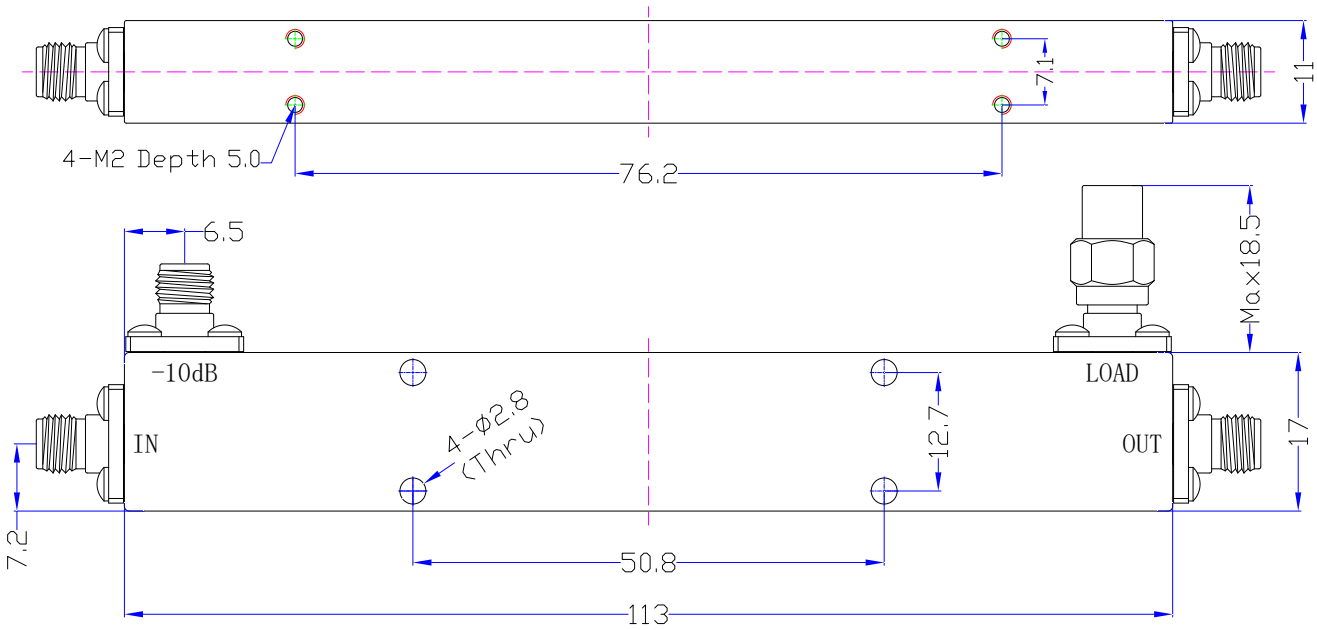

DC005265K-10

Directional Coupler, 0.5 to 26.5 GHz, 10 dB, 2.92mm Female

Rev 1

Typical Test Data

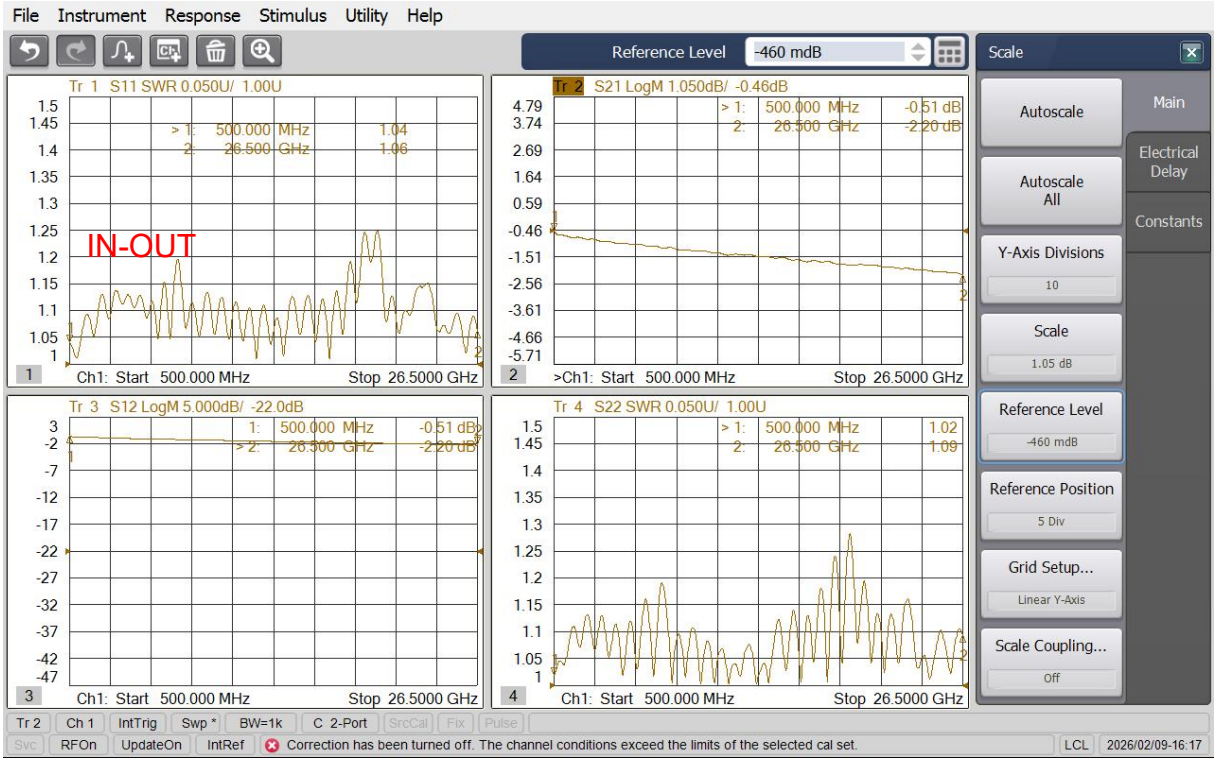

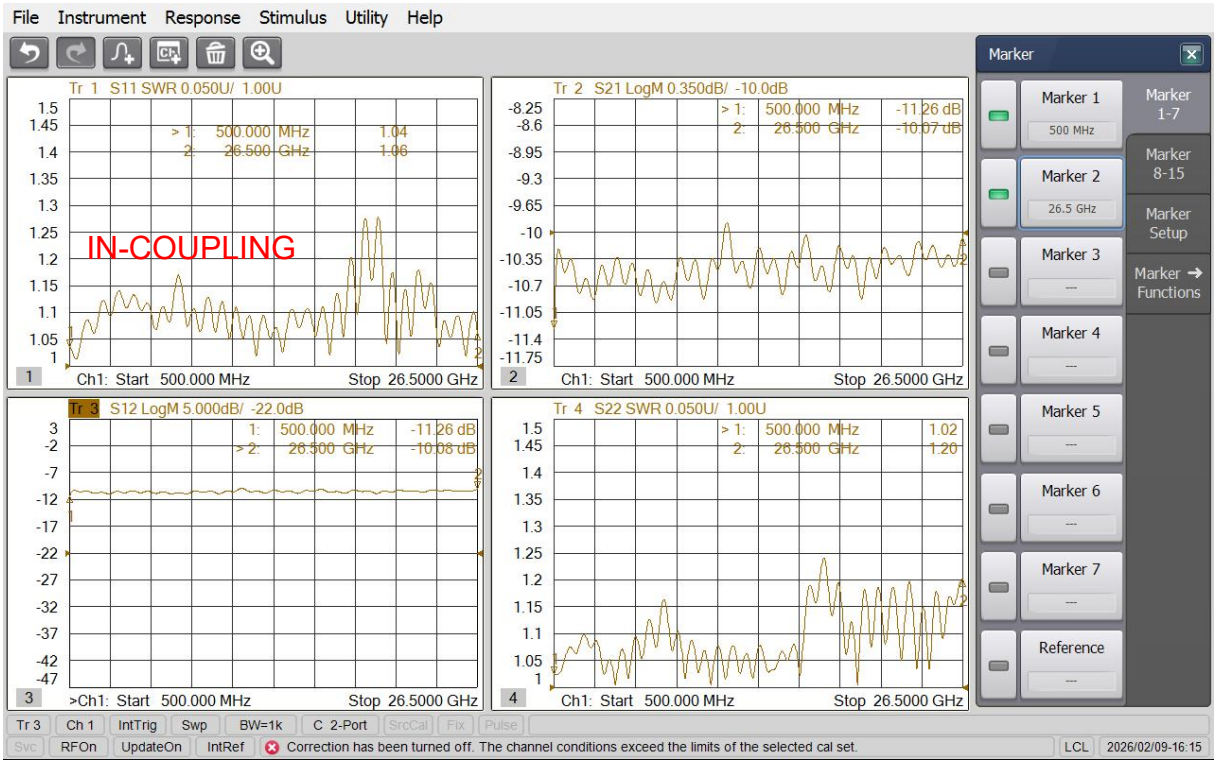

DC005265K-10

Directional Coupler, 0.5 to 26.5 GHz, 10 dB, 2.92mm Female
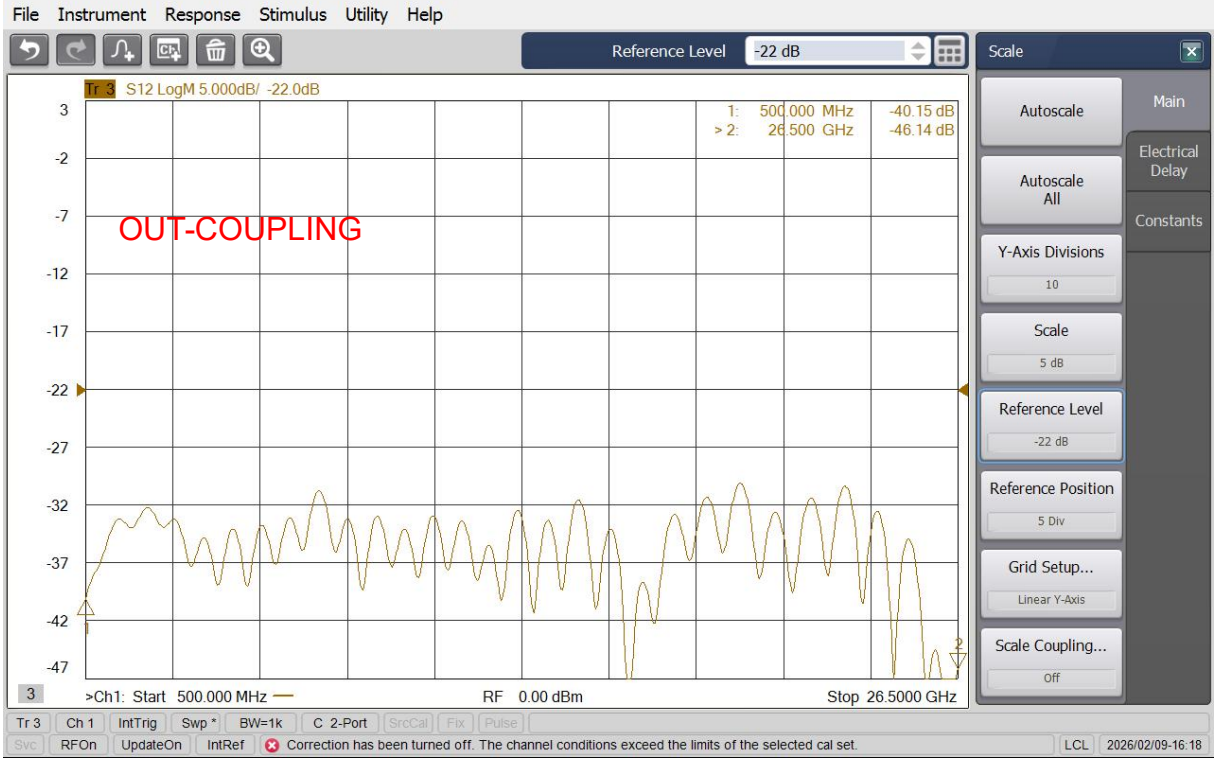
Rev 1